ZDDQ
ELECTRIC

ENERGY SAVING
POWER QUALITY SOLUTION

Anhui Zhongdian Electric Co., Ltd.

Tel: 86-552-4081055, 4077338

Fax: 86-552-4081155

Add.: No.25,Jinhe Rd, Economic&Development Zone,

Huaiyuan, Bengbu, Anhui,China

Mail:hanson@chinazddq.com

Web: http://www.zddqelectric.com/

ZDDQ
ELECTRIC

Anhui Zhongdian Electric Co., Ltd.

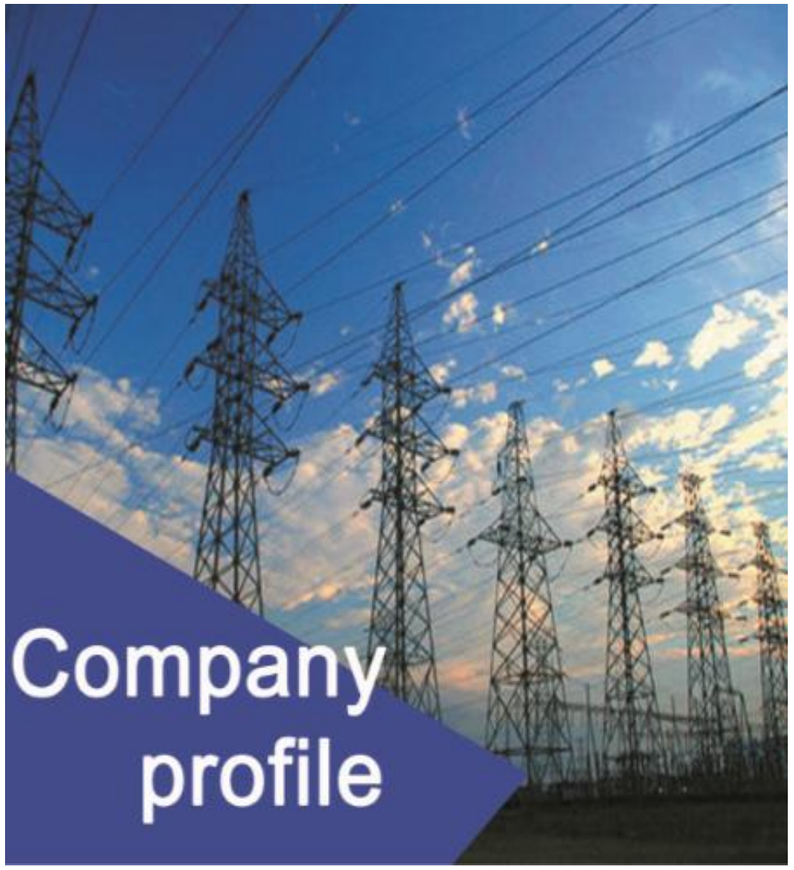

Anhui Zhongdian(ZDDQ) Electric Co., Ltd. established in 2001. ZDDQ Technology Park locates in Bengbu City of Anhui Provice. We're a professional and leading manufacture, focus on advanced power quality improvement and power factor correction. APF,SVG,APFC are our main products. ZDDQ has a leading independent R&D team and quality supervision system, and maintain long-term cooperative relations with China University of Science and Technology, Zhejiang University and a number of well-known institutions.

We insists on customers' demand as the guide, with the technology innovation as the drive, through 20 years technology accumulation, has already owned a series of power quality products including APF, Medium voltage and low voltage SVG, Medium voltage and Low voltage Automatic Power Factor Correction, which are widely used in many countries and industries such as power grid, hospital, sewage plant, railway, subway, airport, seaport, oil and chemical industry, metallurgy, coal mine, tele-communication and high buildings and so on.

CONTENTS

Focus on Power Quality Improvement and Power Factor Correction.

Analysis of Power Quality

Problems, Hazards and Analysis of Causes

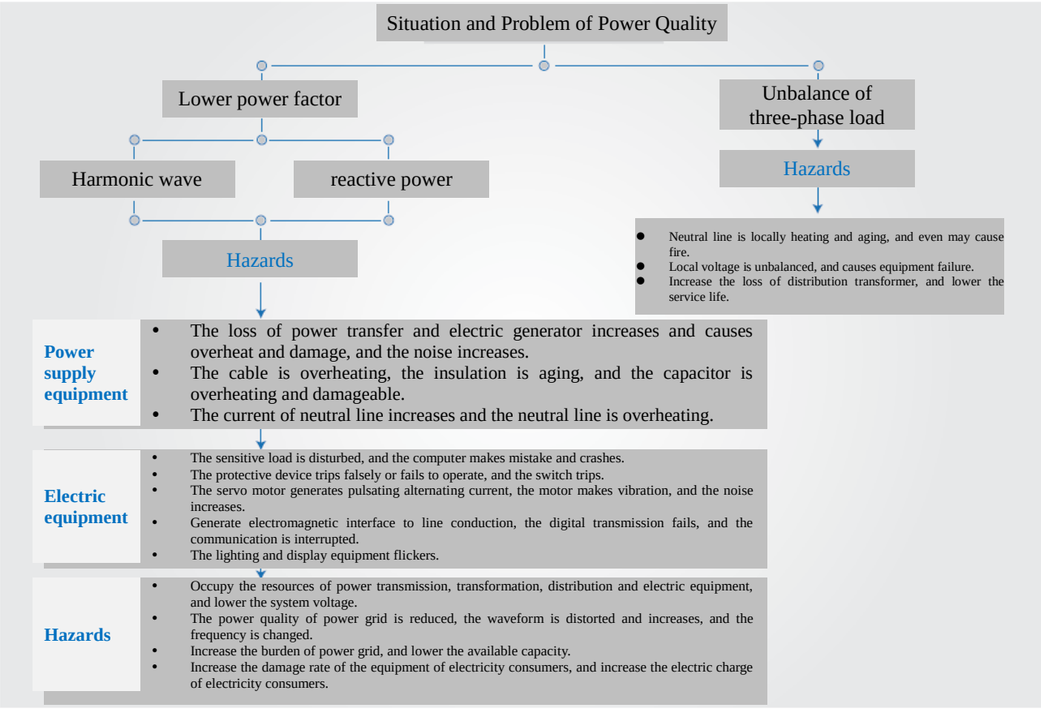

Common Harmonic Sources are as Follows

- Rectifier, charging device
- Frequency converter, DC speed regulator
- DC power supply, charger
- Electric arc furnace, induction heating equipment
- Welding equipment
- Electrified railway and ship electric drive
- Air conditioner and other household appliances
- Lighting equipment
- Uninterrupted power supply UPS, EPS
- Computer and other office equipment

National Standards for Harmonic Limits

For user equipment and public power distribution network, the power quality index directly affects the efficacy, service life and efficiency of equipment, and even may directly damage the electric equipment.

In accordance with *Quality of Electric Energy Supply – Harmonics in Public Supply Network* (GB/T 14549-1993), the public supply network standard is as follows:

Nominal voltage of power grid (kV)	Total harmonic distortion of voltage (%)	Voltage content rate of each order of harmonic wave	
		Odd order	Even order
0.38	5.0	4.0	2.0

Standard voltage KV	Reference short-circuit capacity MVA	Harmonic order and allowable value of harmonic current, A																							
		2	3	4	5	6	7	8	9	10	11	12	13	14	15	16	17	18	19	20	21	22	23	24	25
0.38	10	78	62	39	62	26	44	19	21	16	28	13	24	11	12	9.7	18	8.6	16	7.8	8.9	7.1	14	6.5	1

Benefit of Power Quality Control

- Improve the power factor, and save electric energy by 10%~25%;
- Reduce the inputs in capacity expansion of transformer, and extend the service life of equipment;
- Increase the operational reliability of equipment, and reduce the inputs in equipment maintenance and replacement;
- Maintain continuity and stability of production and power supply, and improve production efficiency;
- Meet national standard, and avoid the power supply management department to urge rectification and give punishment.

Application Industry of Power Quality Control

Power Grid, Semi-conductor, rail traffic, telecommunication, hospital, municipal administration, petrochemical, electronics, mining,, automobile manufacturing, machinery & heavy industry, marine petroleum, sewage treatment, cement, tobacco, plastics.

400V Active Harmonic Filter ZD-APF-1000

Active Power Filter is a perfect comprehensive solution to power quality problems with power grid such as harmonic wave, reactive power, and three-phase load unbalance. ZD-APF-1000 active power filter is connected in parallel in power grid, to detect the harmonic wave in power grid in real time, generate the reverse-phase compensation current through the converter, and dynamically filter the harmonic wave in power grid. The operation of ZD-APF-1000 active harmonic filter is unaffected by power grid structure and load type, and it will not produce harmonic oscillation with the system, thus perfectly realizing harmonic wave control of various loads. ZD-APF-1000 active harmonic filter can also realize dynamic reactive compensation, and control the capacitor switching, to improve the power factor of power grid. Meanwhile, ZD-APF-1000 active harmonic filter has the function of controlling the three-phase load current unbalance, thus comprehensively solving various power quality problems with power grid.

Principle

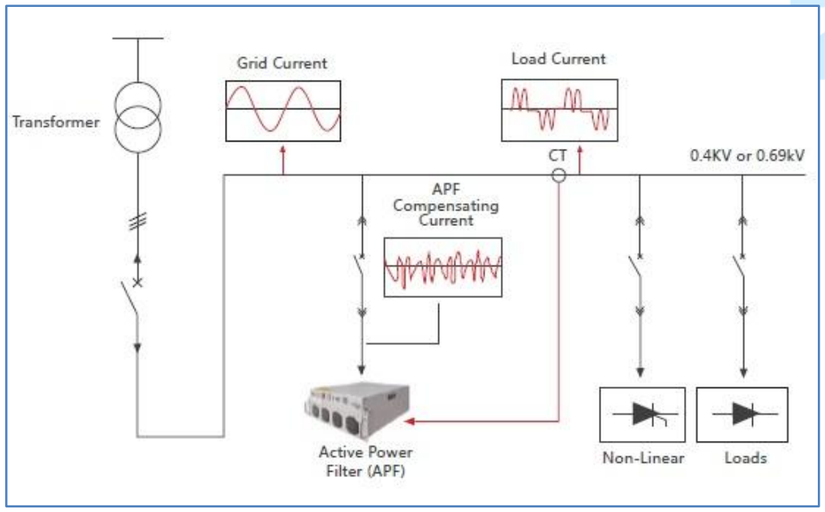

Data Sheet

Electrical properties	Rated voltage	400VAC,3P4W
	Rated frequency	50/60Hz
	Circuit topology	Three-level topology, IGBT
	Electrical connection	Three-phase three-wire, Three-phase four-wire
	Filter range	2nd~50th order harmonics (selectable)
	Filtering control effect	Harmonic filtering rate ≥97%; THDi<5% after systematic control
	Compensation mode	Harmonic compensation, Reactive power compensation, Three-phase load unbalance compensation function
	Reactive compensation effect	>0.98
	Three-phase unbalance compensation effect	The degree of unbalance of three-phase active current of the system is less than 5% after compensation within the rated capacity.
	Initial response time	<200us
	Response time	<5ms
	Active loss of system	<3%
	Output current limit	Automatically limited within 100% of rated capacity to output
	Number of units connected in parallel	≤10 units (single CT)
	MTBT	>100,000 hours
Control characteristics	Controller	DSP+FPGA
	Control algorithm	Self-adaptive control algorithm
	Communication mode	Adopt Modbus remote communication protocol; communication interface adopts RS485 and CAN bus
	Control connection	Fiber or electrical connection
Structural characteristics	Weight	Refer to the model selection table.
	Level of protection	IP20
	Cooling method	Speed regulation intelligent air cooling
	Noise	<60db (<45db during low-speed operation)
	Installation method	Rack type or wall mounted type
Environmental requirements	Ambient temperature	-20~55℃
	Relative humidity	Maximum 95%, without condensation
	Mounting height above sea level	≤1,500 at rated capacity; appropriately reduce the capacity if it is greater than 1,500

Model Table

Applied type	Model	Connection type	Voltage Class	Rated Capacity	Dimensions	Weight
APF Module	ZD-APF-1000/30-4-4L-R	3P4W	400V	30A	460*122*526mm	17.8kg
	ZD-APF-1000/50-4-4L-R	3P4W	400V	50A	460*122*526 mm	17.8kg
	ZD-APF-1000/75-4-4L-R	3P4W	400V	75A	551*190*540 mm	35.6kg
	ZD-APF-1000/100-4-4L-R	3P4W	400V	100A	551*190*540 mm	35.6kg
	ZD-APF-1000/150-4-4L-R	3P4W	400V	150A	558*219*540 mm	43kg

Remarks: The modular APF products support the combination of different models, for example, 75A modular unit and 50A modular unit can be combined into 125A modular cabinet system. The standard cabinet (800×800×2,200) can install six 75A modules. If multiple cabinets are running in parallel with higher capacity, CT which meets the specific requirements is needed.

Typical Design Scheme

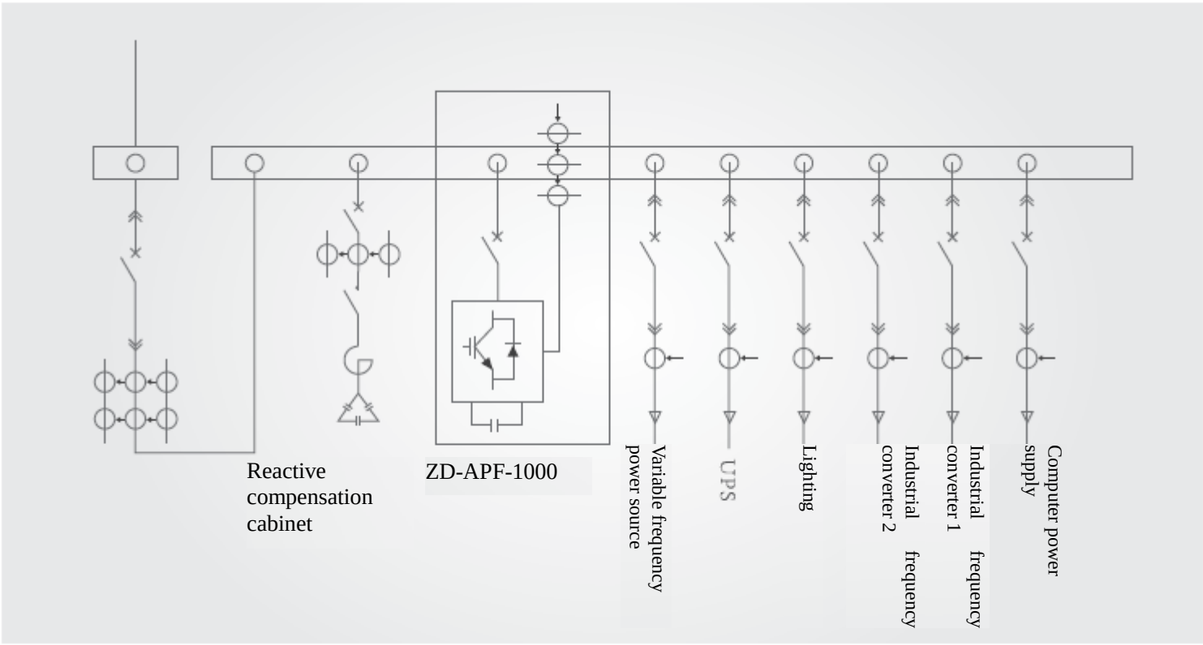

Reference Table of Model Selection for Central Management

Transformer Capacity/ KVA	APF Configuration Capacity (A)				
	Building Subway	Medical / Tire / Metallurgy	Manufacturing factory / New energy /Automobile	Performing arts center / Silicon manufacture / Oil exploitation	Chemical
THDi	10%	15%	20%	25%	30%
200	35	50	50	60	100
250	35	50	75	75	100
315	50	60	100	100	125
400	50	75	100	125	150
500	60	100	125	150	180
630	100	125	160	200	250
800	100	150	200	250	300
1000	125	200	250	300	350
1200	160	250	300	400	450
1600	200	300	400	500	550
2000	250	360	500	600	700
2500	300	450	600	700	850

Note: The above values are calculated under the condition that the value of K is 0.8, which is transformer load rate, and the load rate can be calculated in proportion.

Typical Cases

Due to too much application of UPS, the harmonic wave of power distribution system of office building of a company among Fortune top 500 companies are serious, and after it is managed with ZD-APF-1000 active power filter, the effect is shown in the figure below (comparison before and after harmonic compensation).

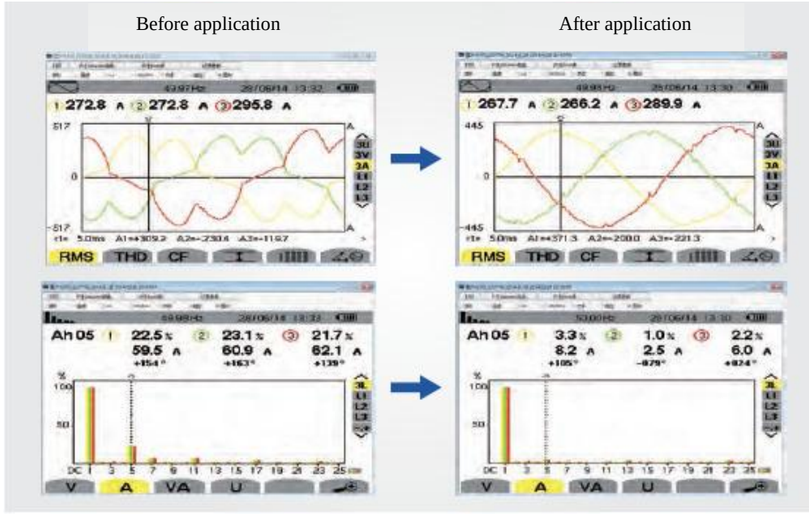

400V APF Complete Cabinet ZD-AMS

Data Sheet

Electrical properties	Rated voltage	400VAC,3P4W
	Rated frequency	50/60Hz
	Circuit topology	Three-level topology, IGBT
	Electrical connection	3P3W,3P4W
	Rated capacity per panel	200A~750A
	Compensation mode	Harmonic compensation, Reactive power compensation, Three-phase load unbalance compensation
	Filter range	2nd~50th order harmonics (selectable)
	Filtering control effect	Harmonic filtering rate ⩾97%; THDi<5% after systematic control.
	Reactive compensation effect	>0.98 at rated capacity.
	Three-phase unbalance compensation effect	The degree of unbalance of three-phase active current of the system is less than 5% after compensation within the rated capacity.
	Response time	<5ms
	Active loss of system	<3%
	Output current limit	Automatically limited within 100% of rated capacity to output .
	MTBT	>100,000 hours
Control characteristics	Controller	DSP+FPGA+IGBT
	Control algorithm	Self-adaptive control algorithm
	Communication mode	Adopt Modbus communication protocol; Adopts RS485 and CAN bus
	Control connection	Fiber or electrical connection
Structural characteristics	Dimension(W*D*H/mm)	800*800*2200 or customerize
	Weight(kg)	400
	Color	RAL7035
	Level of protection	IP3X
	Cooling method	Air cooling
	Cable entry	Bottom or top
	Installation method	Floor Standing.
Environmental requirements	Ambient temperature	-20~55°C
	Relative humidity	Maximum 95%, without condensation
	Mounting height above sea level	≤1,500 at rated capacity; appropriately reduce the capacity if it is greater than 1,500

Typical Model Table

Applied Type	Model	Connection type	Voltage Class	Rated Capacity	Dimension	Weight
APF Panel	ZD-AMS-300-4-4L	3P4W	400V	300A	800*800*2200mm	300 kg
	ZD-AMS-350-4-4L	3P4W	400V	350A	800*800*2200mm	300kg
	ZD-AMS-400-4-4L	3P4W	400V	400A	800*800*2200mm	320kg
	ZD-AMS-500-4-4L	3P4W	400V	500A	800*800*2200mm	360kg
	ZD-AMS-600-4-4L	3P4W	400V	600A	800*800*2200mm	400kg

Human Machine Interface

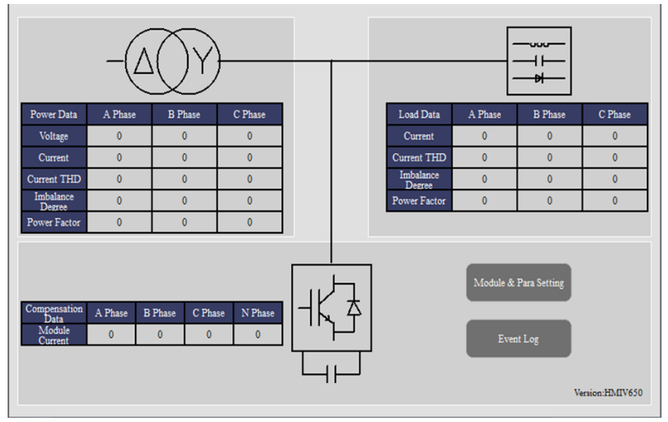

7inch Colorized HMI

Overall Dimension

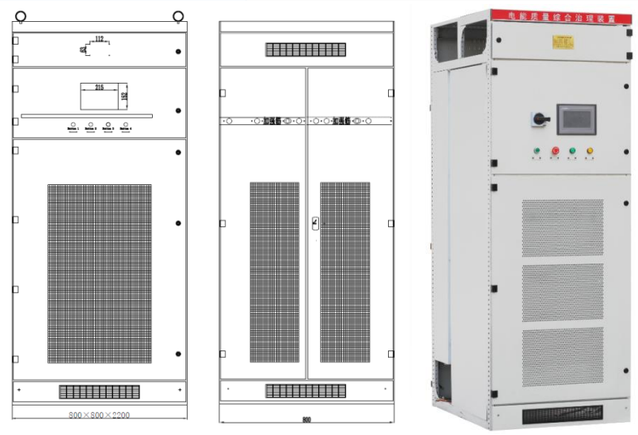

Overall Dimension Drawing of Complete Cabinet (Unit: mm)

Note: Size of Cabinet can be 800*800*2200mm or customerzied size

400V Static Var Generator ZD-SVG-1000

ZD-SVGM-1000 Static Var generator (SVG) is the new standard in reactive energy compensation for 400V networks. This power electronic current source is the accurate and highly reliable solution for today's networks characterised by significant increase in harmonics, voltage variations caused by intermittent renewable sources connected to the network and voltage level due to the smart grid development. The DSP controlled IGBT topology enables a perfect compensation on each phase for both inductive and capacitive loads. It also correct phase unbalance where necessary. Immune to harmonics, resonance and voltage level, it offers a maintenance free solution reusable in any network configuration.

Principle

Following are principle of Static var generator.

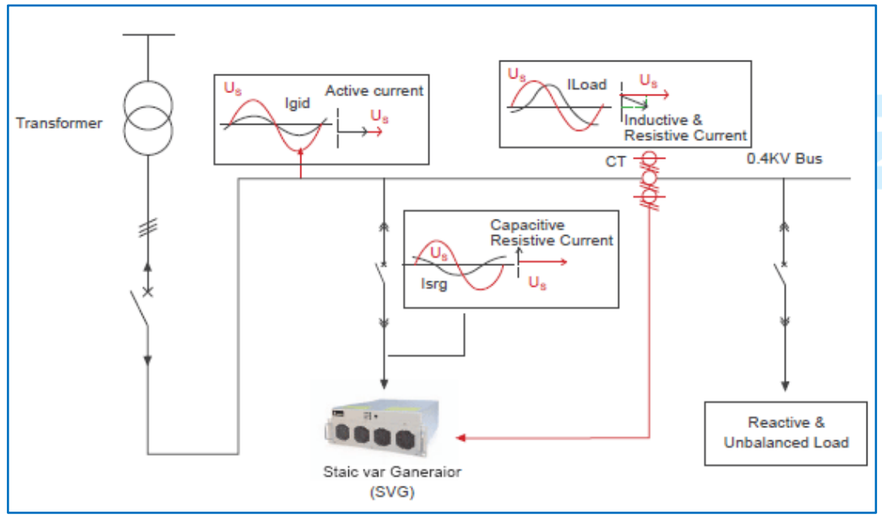

Main Functions

- Precise and step-less power factor correction;
- Fast and dynamic compensation, with a response time less than 5ms;
- Both inductive and capacitive reactive power compensation;
- Improve power transmission stability.

Data Sheet

Electrical properties	Rated voltage	400VAC,3P4W
	Rated frequency	50Hz/60Hz
	Circuit topology	Three-level topology, IGBT
	Reactive compensation effect	The system power factor is greater than 0.98 after compensation within the rated capacity.
	Initial response time	<200us
	Response time	<5ms
	Active loss of system	<3%
	Output current limit	Automatically limited within 100% of rated capacity for output
	Number of units connected in parallel	≤10 units
	MTBT	>100,000 hours
Control characteristics	Controller	DSP+FPGA
	Control algorithm	Self-adaptive control algorithm
	Capacitor control interface	16 ways
	Communication mode	Adopt Modbus remote communication protocol; communication interface adopts RS485, Bluetooth module (optional), and GPRS module (optional)
	Control connection	Fiber or electrical connection
Structural characteristics	Weight	Refer to the model selection table.
	Level of protection	IP2X
	Cooling method	Speed regulation intelligent air cooling
	Noise	<50db (<40db during low-speed operation)
	Installation method	Wall mounted type or Rack type
Environmental requirements	Ambient temperature	-20~55℃
	Relative humidity	Maximum 95%, without condensation
	Mounting height above sea level	≤1,500m at rated capacity; appropriately reduce the capacity if it is greater than 1,500m

Model Table

Applied Type	Model	Connection Type	Voltage Class	Capacity	Dimension	Weight
SVG Module	ZD-SVG-1000/50-4-4L-R	3P 4W	400V	50kvar	540×472×122mm	25kg
	ZD-SVG-1000/75-4-4L-R	3P 4W	400V	75kvar	540×550×190mm	45kg
	ZD-SVG-1000/100-4-4L-R	3P 4W	400V	100kvar	540×558×220mm	55kg
	ZD-SVG-1000/50-4-4L-W	3P 4W	400V	50kvar	503×122×558mm	25kg
	ZD-SVG-1000/75-4-4L-W	3P 4W	400V	75kvar	503×201×598mm	45kg
	ZD-SVG-1000/100-4-4L-W	3P 4W	400V	100kvar	503×220×608mm	55kg

400V SVG Complete Cabinet ZD-SVG

Data Sheet

Electrical properties	Rated voltage	400VAC,3P4W
	Rated frequency	50Hz/60Hz
	Circuit topology	Three-level topology, IGBT
	Reactive compensation effect	>0.98
	Initial response time	<200us
	Response time	<5ms
	Active loss of system	<3%
	Output current limit	Automatically limited within 100% of rated capacity for output
	Number of units connected in parallel	≤10 units
	MTBT	>100,000 hours
Control characteristics	Controller	DSP+FPGA+IGBT
	Control algorithm	Self-adaptive control algorithm
	Capacitor control interface	16 ways
	Communication mode	Adopt Modbus remote communication protocol; communication interface adopts RS485, Bluetooth module (optional), and GPRS module (optional)
	Control connection	Fiber or electrical connection
Structural characteristics	Size(W*D*H/mm)	800*800*2200
	Level of protection	IP3X
	Cooling method	Speed regulation intelligent air cooling
	Cable entry	Bottom or Top
	Installation method	Free land standing
Environmental requirements	Ambient temperature	-20~55°C
	Relative humidity	Maximum 95%, without condensation
	Mounting height above sea level	≤1,500m at rated capacity; appropriately reduce the capacity if it is greater than 1,500m

Typical Model Table

Applied Type	Model	Connection Type	Voltage Class	Rated Capacity	Dimensions	Weight
SVG Panel	ZD-SVG-300-4-4L	3P4W	400V	300Kvar	800*800*2200mm	320kg
	ZD-SVG-350-4-4L	3P4W	400V	350Kvar	800*800*2200mm	360kg
	ZD-SVG-400-4-4L	3P4W	400V	400Kvar	800*800*2200mm	400kg

Note: The HMI and Cabinet dimension is same as ZD-AMS in page 10

690V Static Var Generator ZD-SVG-2000

ZD-SVGM-2000 Static Var generator (SVG) is the new standard in reactive energy compensation for 690V networks. This power electronic current source is the accurate and highly reliable solution for today's networks characterised by significant increase in harmonics, voltage variations caused by intermittent renewable sources connected to the network and voltage level due to the smart grid development. The DSP controlled IGBT topology enables a perfect compensation on each phase for both inductive and capacitive loads. It also correct phase unbalance where necessary. Immune to harmonics, resonance and voltage level, it offers a maintenance free solution reusable in any network configuration.

Data Sheet

Electrical properties	Rated voltage	690VAC,3P3W
	Input voltage	600~690(~20%~+15%)VAC
	Rated frequency	50Hz
	Circuit topology	Three-level topology, IGBT
	Reactive compensation effect	>0.98
	Response time	<5ms
	Active loss of system	<3%
	Over current capacity	1.1
	MTBT	>100,000 hours
Control characteristics	Communication mode	Modbus protocol; RS485, Bluetooth (optional), GPRS (optional)
	Control connection	Fiber or electrical connection
Structural characteristics	Weight	Refer to the model selection table.
	Level of protection	IP2X
	Cooling method	Speed regulation intelligent air cooling
Environmental requirements	Ambient temperature	-20~55°C
	Relative humidity	Maximum 95%, without condensation
	Mounting height above sea level	⩽2000m at rated capacity;

Model Table

Applied Type	Model	Connection Type	Voltage Class	Capacity		Dimension
SVG Module	ZD-SVG-2000/100-6-3L	3P 3W	690V	100kvar	87A	550×550×185mm
	ZD-SVG-2000/150-6-3L	3P 3W	690V	150kvar	131A	550×550×185mm
	ZD-SVG-2000/200-6-3L	3P 3W	690V	200kvar	175A	580×650×220mm
	ZD-SVG-2000/300-6-3L	3P 3W	690V	300kvar	288A	580×640×225mm

Note: Pictures of modular dimensions refer to Page 15.

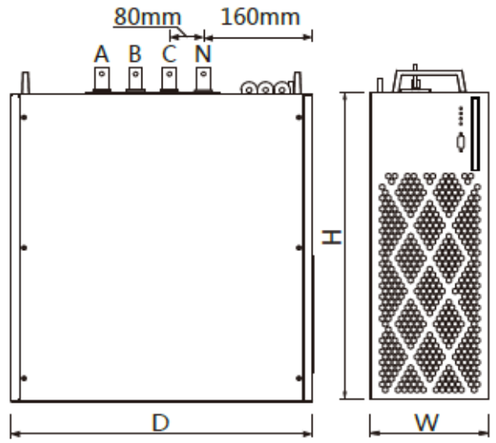

690V SVG

100/150Kvar Modular

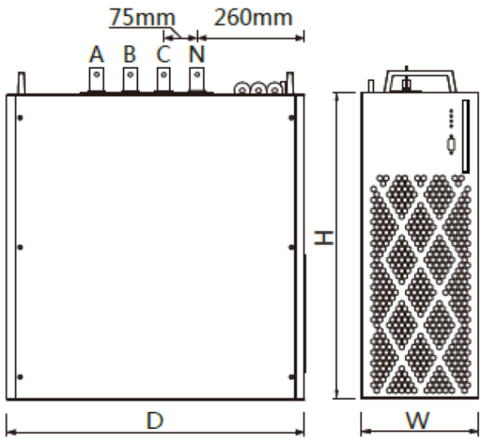

690V SVG

200kvar Modular

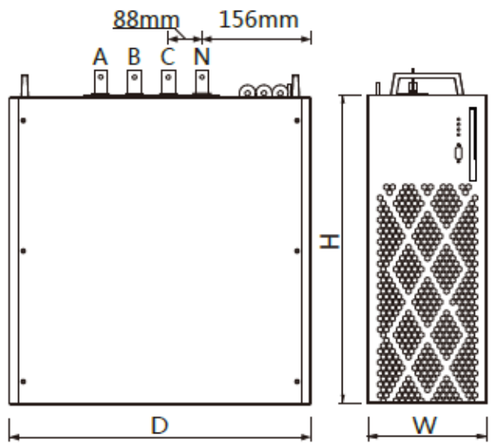

690V SVG

300kvar Modular

690V SVG Complete Cabinet ZD-SVG

Data Sheet

Electrical properties	Rated voltage	690VAC,3P3W
	Input voltage	600~690(~20%~+15%)VAC
	Rated frequency	50Hz
	Circuit topology	Three-level topology, IGBT
	Reactive compensation effect	>0.98
	Response time	<5ms
	Active loss of system	<3%
	Over current capacity	1.1
	MTBT	>100,000 hours
Control characteristics	Communication mode	Adopt Modbus protocol; communication interface adopts RS485, Bluetooth module (optional), and GPRS module (optional)
	Control connection	Fiber or electrical connection
Structural characteristics	Weight	Refer to the model selection table.
	Level of protection	IP3X
	Cable entry	Bottom
	Cooling method	Forced air cooling
Environmental requirements	Ambient temperature	-20~45℃
	Relative humidity	Maximum 95%, without condensation
	Mounting height above sea level	≤2000m at rated capacity;

Typical Model Table

	Model	Connection Type	Voltage Class	Rated Capacity	Dimensions
SVG Panel	ZD-SVG--200-6-3L	3P3W	690V	200Kvar	800*800*2200mm
	ZD-SVG-300-6-3L	3P3W	690V	300Kvar	800*800*2200mm
	ZD-SVG-600-6-3L	3P3W	690V	600Kvar	800*800*2200mm
	ZD-SVG-900-6-3L	3P3W	690V	900Kvar	800*800*2200mm
	ZD-SVG-1200-6-3L	3P3W	690V	1200Kvar	1200*800*2200mm
	ZD-SVG--1800-6-3L	3P3W	690V	1800Kvar	1800*800*2200mm
	ZD-SVG--3000-6-3L	3P3W	690V	3000Kvar	3500*800*2200mm
	ZD-SVG--6000-6-3L	3P3W	690V	6000Kvar	6500*800*2200mm
	ZD-SVG--9000-6-3L	3P3W	690V	9000Kvar	9500*800*2200mm

6kv~35kv ZD-FGSVG STATCOM

Like SVC but faster, STATCOM continuously provides variable reactive power in response to voltage variations, supporting the stability of the grid. STATCOM operates according to voltage source converter (VSC) principles, combining unique PWM (pulse width modulation) with millisecond switching. STATCOM functions with a very limited need for harmonic filters, contributing to a small physical footprint. If required, switched or fixed air core reactors and capacitors can be used with the VSC as additional reactive power elements to achieve any desired range.

ZD-FGSVG STATCOM has outdoor type and indoor type, with air cooling system or water cooling system.

STATCOM advantages

STATCOM ,Best Power Quality Solutions for Medium Voltage Grids	The fastest dynamic voltage stabilizer Better control for power grids, better load compensation Optimal stability and quality In harmony with harmonics-Best flicker reduction Fastest response time-efficient solution

Model Rules

Single Machine	Model Description
Note: Capacity (Mvar) means the rated maximum adjustment capacity range from inductive reactive power to capacitive reactive power. For example C2.0/10 means the device is connect to the 10kV power grid directly and its capacity is ±2Mvar. It can change from +2000kvar (inductive) to -2000kvar (capacitive) continuously and smoothly.	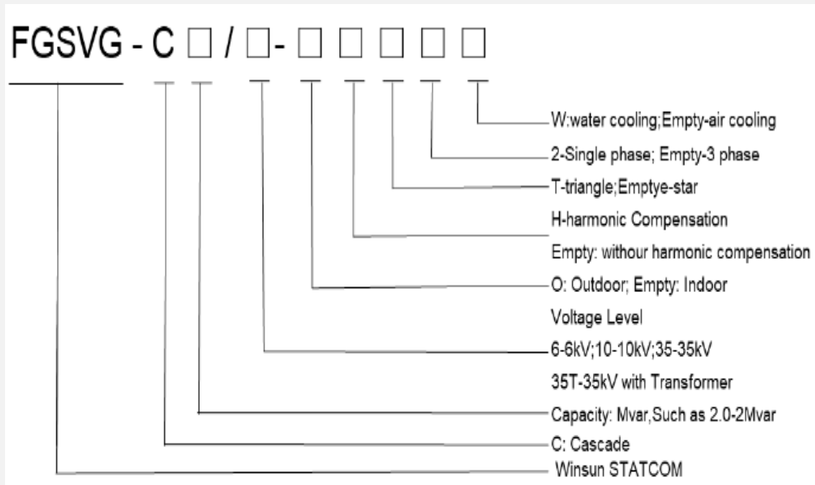

Performance Indicators

Electrical properties	Rated voltage	6kv~35kv
	Operating frequency	50/60Hz
	Electrical connection	Three-phase three-wire
	Rated Capacity	1Mvar~100Mvar
	Reactive Power Compensation	Compensate inductive and capactive power continuously and smoothly.
	Control Power	380VAC, 220VAC, or 220VDC
	Over-load Capacity	>120%
	Response time	≤10ms
	Active power loss	≤0.8%
	THDi (Current)	≤3%
	Start regulated reactive power	10kvar
	Resolution of compensate current	1%
Control characteristics	Main Circuit	H-Bridge IGBT
	Redundant Design	Yes
	Power Cells Design	Yes
	Protection	The protection strategy includes three levels, such as component protection, device protection, system protection.
	Running Mode	Constant reactive power, constant assessment point of reactive power, constant assessment point of power factor, constant assessment point of voltage, load compensation and 96 points time sharing control.
	Communication Interface	Ethernet, RS485, CAN, high-speed optical communication interface
	Communication Protocol	Communication protocol: MODBUS_RTU, ProfiBUS, CDT91, IEC61850-103/104, CANOPEN, User-defined.
Structural characteristics	Weight and Dimensions	Refer to the model table.
	Level of protection	Indoor IP40,Outdoor IP44
	Cooling system	Air cooling system or water cooling system
	Installation method	Indoor or outdoor(Container)
Environmental requirements	Ambient temperature	-10~40℃
	Relative humidity	Maximum 90%(25℃), without condensation.
	Mounting height above sea level	≤2,000m at rated capacity; If above, should inform in advance.
	Seismic intensity	8 degree

Projects Applications:

35Kv Statcom in Solar Plant

- Install place: DelingHa City, Tsinghai Province
- Capacity: -8Mvar~+8Mvar
- Rated Voltage: 35Kv
- Load: 30Mvar Solar Farm, Inductive and Capacitive Load.
- Effect: PF>0.98, voltage fluctuation <1.5%, TDHi<5%



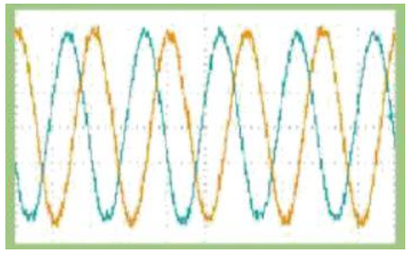
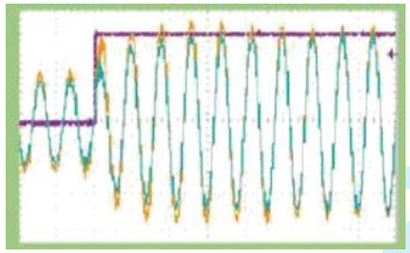

Parallel running waveform Response time test

35Kv Statcom in Wind Farm

- Install place: Changji City, Xinjiang Province
- Capacity: -16Mvar~+16Mvar
- Rated Voltage: 35Kv
- Load: Great voltage fluctuation, and the instantaneous power factor is as low as 0.81.
- Compensation effect After Statcom: Power Factor>0.98,
  Meet harmonics Standard (GB/T 14549 / 1993);
  Meet the needs of low voltage traversing.


10Kv APFC for Rolling Mill

- Install place: Heze City, Shandong Province
- Capacity: 8000kvar
- Rated Voltage: 10Kv
- Load: large voltage fluctuation,
  power factor 0.35,
  harmonics pollution at order 3rd,5th,7th
- Compensation effect after APFC :
  Power Factor 0.91, voltage fluctuation<1.5%,


0.4kv APF&SVG for Chemical Factory

- Install place: Binzhou City, Shandong Province
- Capacity: 1100A APF and 900Kvar SVG
- Rated Voltage: 400V
- Load: Serious harmonics pollution and low power factor
- Compensation effect APF and SVG:
  Power Factor>0.98, THDi<5%,THDv<2%


Projects List

SN	Product	Capacity	User	Field	City	Country

1	10kv APFC	2000Kvar	Runfeng Power	Mining	Liupanshui	CN
2	10kv APFC	3000Kvar	CN Electric Construction	Power Distribution	Mianyang	CN
3	6kv APFC	3600kvar	Weifang Chemical Factory	VFDs	Weifang	CN
4	400V SVG	1100kvar	Hebei Yanzhong Power	Mining	Shijiazhuang	CN
5	10KV SVG	2000Kvar	Ningbo Power Design Institute	Solar	CiXi	CN
6	35kv SVG	4Mvar	GD Changsheng	Solar	Dawu	CN
7	6kv APFC	2Mvar	Tongxin Power design Institute	Rolling furnace	Zhengzhou	CN
8	35kv SVG	10Mvar	CN Huadian Corporation	Wind	Yantai	CN
9	10kv APFC	6Mvar	JinRen Design Institute	Electrolytic AL Manu.	Jijing	CN
10	400V APF	1200A	National Grid(jiangsu)	Hospital	Heze	CN
11	400V APF	600A	Hebei TX power Design Institute	Hospital	Baoding	CN
12	400V SVG	900kvar	Jinan Metro	Railway/metro	Jinan	CN
13	10KV SVG	1400kvar	Xian hh power design institute	Power Distribution	Xining	CN
14	11kv APFC	1200kvar	Motors	Sugar factory	Jhang	PK
15	SVG	1MVAR	Solar	Solar station	Icheon	KR
16	APFC	11MVAR	Solar	Solar station	Kelinchi	MY
17	400V APF	600A	Harmonics from device	Medical		ID
18	400V APF	600A	Motors	Metallurgical industry		CL
19	400V SVG	800Kvar	Harmonics from device	Medical		IN
20	380V SVG	600Kvar	Lights	high building		BR
21	6.6kv SVG	1000Kvar	Solar	Solar Sation		MY
22	400V APF	600A	Cranes	Seaport		MY
23	7.2KV APFC	1500kvar	Poor Power Factor	Steel		RO
24	380V APF	800A	VFDs and Motors	Chemical		EG
25	380V APF	400A	Melting funace	Steel factory		BR
26	380V APF	300A	Harmonics from device	Hospital		BR
27	440V APF	300A	Harmonics from device	Hospital		CO
28	220V SVG	6*75Kvar	Motors	Factory		CO
29	440V APFC	350Kvar	Motors	foundry factory		CO
30	400V APF	300A	Motors	Steel factory		IN
31	400V SVG	400kvar	Motors and ovens	Bakery factory		ZA
32	400V APF	300A	VFDs	Oil factory		LB
33	400V SVG	200Kvar	Motors	Steel factory		IN
34	400V APF	300A	VFDS	Seaport		SG
35	400V APF	600A	VFDs	Seaport		SG
36	3.3kv APFC	675kvar	Waste water treatment	Motors		ZW
37	33kv Statcom	2.5Mvar	Symbior 8MW solar plant	Solar plant		BD
38	6.6kv Statcom	2Mvar	Auto Manufactory	Automotive machine		TH
39	10kv Statcom	3Mvar	Wind Plant	Wind Plant		KR
40	35kvs tatcom	30Mvar	Power Plant	Oil and Gas		GO

Company Certificate and Honor